力 臻 股 份 有 限 公 司
LJ DEVICE CO., LTD.

零 件 規 格 書 / 承 認 書
SPECIFICATION FOR APPROVAL

CUSTOMER : _____

DESCRIPTION : **VIBRATOR**

MODEL : **FG-T3071728T09B**

CUSTOMER PART NO : _____

APPROVED SIGNATURES

Rev	Date	Description	Designed	Checked	Approved
A	2022/1/7	Release		Po Chen	

臺北市北投區吉利街 131 號 2 樓
2F, NO. 131, JILI ST., PEITOU, TAIPEI, TAIWAN, R.O.C.
TEL : 886-2-2827-0158 · FAX : 886-2-2827-0348

- 目录/List -

1.封面 1/18

2.目录 2/18

3.更改记录/Revision History 3/18

4.结构形式/Construction Form 4/18

5.适用范围/Scope of Application 4/18

6.测试条件/Testing Condition 5/18

7.贮存环境/Storage Environment 5/18

8.电气特性/Electrical Characteristics 5/18~6/18

9.机械特性/Mechanical Characteristics 7/18~8/18

10.可靠性试验/Reliability Test 9/18~12/18

11.环保要求/Environment Protections 12/18

12.注意事项/Caution 13/18~14/18

13.外形图/Outside View 15/18

14.结构图及物料清单/Structure Drawing & BOM 16/18

15.包装要求/Packaging Requirement 17/18

16.标识/Lot No.Indication 18/18

17.回流老化曲线/Reflow Specification 18/18

更改记录/change the record				
版本 Version	编制 Originator	批准 Approval	更改详情 Detail spec changes	日期 Date
A0	张勇	徐旭	初始规格/Preliminary spec	2018-07-13

4.结构形式/Construction Form

NO.	项目/Item	规格/Specifications
4-1	电机结构 Motor construction	Φ3.2圆柱形铁芯直流电机 Φ3.2 DC Cored motor
4-2	换向片数 Number of phases	3组换向片 3-phases
4-3	磁极数 Number of magnet poles	两极（外置磁极型式） 2-poles (Inner magnet type)
4-4	线圈 Coil construction	铁芯线圈 Iron-cored coil
4-5	整流技术 Rectifying method	采用高精度电刷和换向器 Precious brush and commutator

5.使用条件/Standard operating condition

NO.	项目/Item	规格/Specifications
5-1	额定电压 Rated voltage	DC2.7V
5-2	使用电压范围 Operating voltage range	DC 2.3~3.2V
5-3	旋转方向 Rotating direction	CW / CCW
5-4	使用温度范围 Operating temperature range	-30℃~+70℃

6.测试条件/Testing condition

NO.	项目/Item	规格/Specifications
6-1	温度 Temperature	20℃±2
6-2	湿度 Humidity	45% ～85%RH
6-3	电源电压 Power supply, voltage source	直流电源或电池 2.7V DC power supply or battery 2.7V
6-4	马达安放状态 Posture of motor	水平

7.贮存环境/Storage environment

NO.	项目/Item	规格/Specifications
7-1	贮存温度 Storage temp	-40℃～+85℃
7-2	相对湿度 Relative humidity	5%～95% (No condensation of moisture/无水汽凝结)

8.电气特性/Electrical characteristic

NO.	项目/Item	单位/Unit	规格/Spec.	条件/Condition
8-1	额定转速 Rated speed	rpm	14000±2500	额定电压:DC 2.7V Rated voltage:DC 2.7V
8-2	额定电流 Rated current	mA	75Max	在额定电压和额定负载下测试/Measure at rated voltage and rated load
8-3	启动电流 Starting current	mA	90Max	在额定电压下锁定振动轮，测电机电流（2/3R 极端电阻处，不在电刷和整流子两点接触的位置）/Measure current at locked counter weight (R1.7×2.8) in rated voltage(2/3R R:1 extreme resisting rate,Not in the position when the brushes contact the commutator at the two contact points)

8-4	启动电压 Starting voltage	V	2.3Max	DC2.3V电压下，开/关为1个循环，共3个循环 On/off-1cycle,total 3cycles under DC2.3V
8-5	端子阻抗 Terminal resistance	Ω	单相 1phase:33±6	正极和负极之间 Between positive and negative
8-6	绝缘电阻 Insulation resistance	MΩ	10Min	测量机壳和引线之间。 测试电压直流100V。 Measuring between case and lead wire.Test voltage DC 100V

9.机械特性/Mechanical characteristics

NO	项目/Item	单位/Unit	规格/Spec.	条件/Condition
9-1	外观 Appearance	/		目测/Visual
9-2	尺寸 Size	mm	见外形图/See outline of drawing	使用游标卡尺和千分尺测量/Use vernier caliper and micrometer to measure
9-3	马达重量 Motor Weight	g	0.7±0.2g	使用天平测量/Use scale
9-4	机械噪音 Mechanical Noise	dB	45 MAX	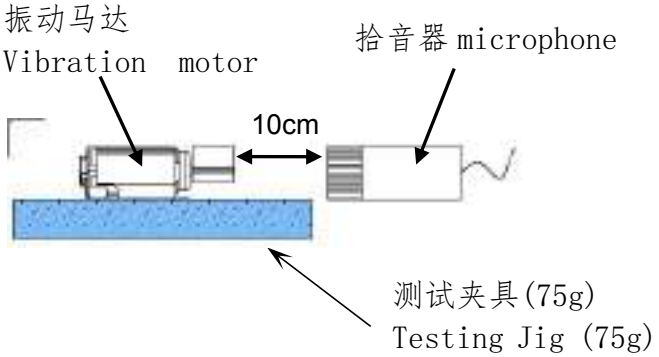 马达：被固定/Motor : be fixed 额定电压:DC 2.7V/Rated voltage : DC 2.7 V 背景噪音： 25dB MAX. Back ground noise: 25dB MAX. 拾音器沿轴向正对电机平面 Microphone faces the plane of motor along the shaft

9-5	振动量 Vibration Strength	Gms	0.41 MIN	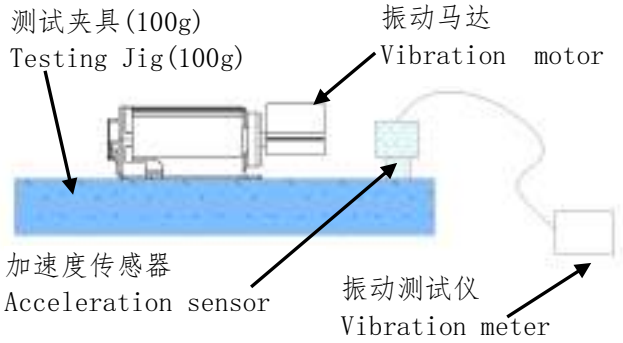 马达：被固定/Motor: be fixed. 额定电压:DC 2.7V/Rated voltage : DC 2.7V .
		Gp	0.58 MIN	
9-6	响应时间 Responsive Time	ms	65	30ms 达到 50%振感,65ms 达到 100% 振感/ Motor vibration sense reach to 50% within 30ms,and 100% within 65ms.

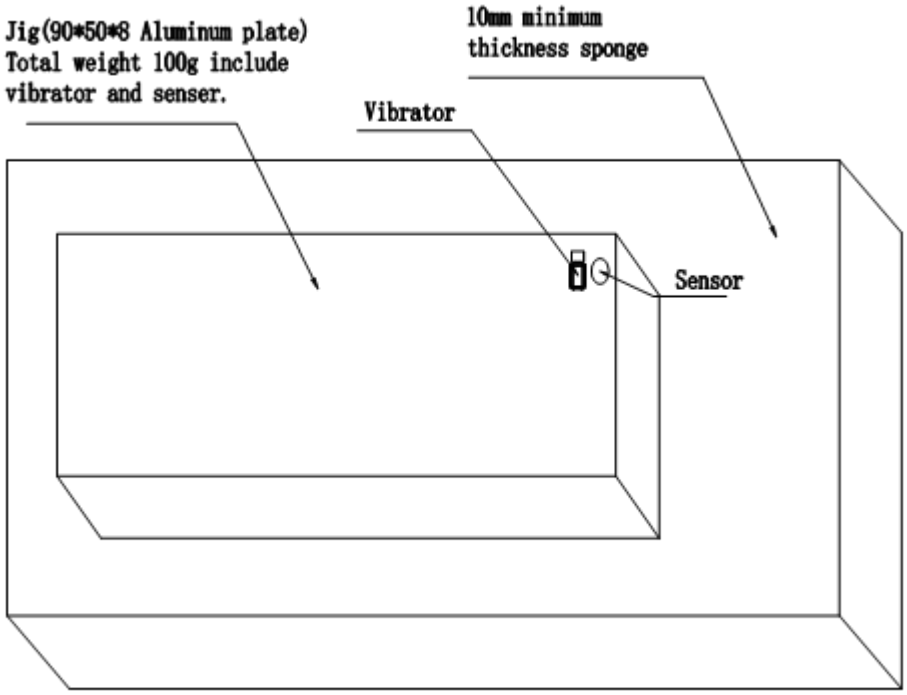

Simulation Vibration test method

10.可靠性试验/Reliability Test

NO	项目/Item	条件/Condition
10-1	高温贮存试验 High temperature storage test	在+80℃的环境下放置96小时，然后在常温常湿下恢复4小时后测试。 Exposed at +80℃ for 96hours, then return to normal temperature and humidity for 4 hours before test.
10-2	低温贮存试验 Low temperature storage test	在-40℃的环境下放置96小时，然后在常温常湿下恢复4小时后测试。 Exposed at -40℃ for 96hours, then return to normal temperature and humidity for 4 hours before test.
10-3	湿热试验 Humidity test	在温度40℃，湿度90%的环境下放置48小时，然后在常态下放置4小时后测试。/Expose the motor under the environment of 40℃,90%HR for 48 hours,then place the motor at normal temperature for 4 hours until further test.
10-4	高低温试验 Heat cycle test	确保电机在下图所示的条件下放置一个周期(马达表面避免有水汽凝结),然后在室温下恢复4小时后,进行测试。/Assure the motor be placed under below testing conditions for one cycle(no condensation of moisture is allowed on the surface of motor), then put the motor at normal temperature for 4 hours until further test. 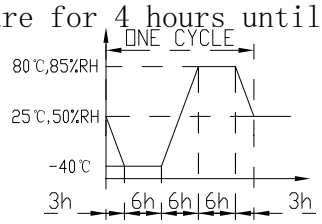
10-5	振动试验 Vibration test	将马达固定在100g的塑料夹具上，按以下要求进行试验： 1)振频范围:10-55Hz 2)全振幅1.5mm 3)振频变化10-55-10 约10分钟 4)振动方向:三个垂直方向 5)持续时间:每个方向10分钟（共30分钟） Fix the motor on a 100g jig (plastic housing),and then make test according to below requirements: 1)Vibration frequency range: 10~55Hz 2)Total amplitude: 1.5mm 3)Sweep ratio: 10~55~10Hz approximate 10min 4)Direction of vibration: Three perpendicular directions 5)Duration: 10min(30min in total)

10-6	跌落试验 Drop test	将马达电机放在大约60g（包括电机）重的物体上,从1.5米的高度跌落到20mm厚的硬木板上，跌落18次。/Set the motor to a fixture of approx.60g(include the motor) and drop it freely from the height of 1.5 meters to the hard wood board of 20mm thick, repeat dropping for 18 times. 高度/Height：1.5m 方向/Direction：±X，±Y，±Z 次数/Times：每一平面下落3次，共计18次/Three drops per plane for a total of 18 drops.
10-7	盐雾试验 Salt spray test	电机放置盐雾试验箱，试验箱内湿度35%，盐溶液浓度5±1%；PH值为6.5-7.2；盐雾沉降量为1-2ml/80cm;浓度为5%的中性盐溶液中24小时。持续期满，清洗试验样品表面，用干净的棉布擦拭后进行检测，要求马达外观、振动功能良好，表面无腐蚀现象。 Put the motor in the salt spray test box for 24 hours, the humidity in the test case should be 35%, concentration of salt solution be 5± 1 %, PH value be 6.5-7.2, the precipitation of salt fog be 1-2ml/80cm, and the neutral salt solution should be with a concentration of 5%. At the end of the period, clean the surface of the tested sample, and then do further test once wiped with a clean cotton cloth. The appearance and vibrating function of the motor are required to be in good condition, and the surface should be free of corrosion.

► 判定标准/Judgment standard

ⓐ试验后，测试数据必须符合以下规格：

After test, measured data must be satisfied as following specifications;

- 启动电压：DC2.3V MAX.
- Starting voltage: DC2.3V MAX.
- 额定转速：变化率在初始值的+30%～-20%以内。
- Rated speed: changing rate must be within +30%～-20% of initial value.
- 额定电流：变化率在初始值的+20%～-30%以内。
- Rated current: changing rate must be within +20%～-30% of initial value.
- 端子阻抗：变化率在初始值的±15%以内。
- Terminal resistance: changing rate must be within ±15% of initial value.

ⓑ外形结构无异常.

There should be no abnormalities in appearance and structure.

10.1 寿命试验/Life test

输入 2.7V 电压/Input voltage 2.7V.

带负载重量（R1.7, t2.8 大约 0.3g）/Load counter weight (R1.7, t2.8 appx0.3g).

NO	项目/Item	条件/Condition
10.1-1	常温寿命试验/Room Temperature Life Test	放置在室温25℃，50%RH的湿度条件下/ Exposure at room temperature of 25℃, and humidity of 50%RH.
10.1-2	高温寿命试验/High temperature Exposure Life Test	放置在高温55℃的条件下/Exposure at high temperature of 55℃.
10.1-3	低温寿命试验 /Low temperature Exposure Life Test	放置在高温-20℃的条件下/Exposure at low temperature of -20℃.

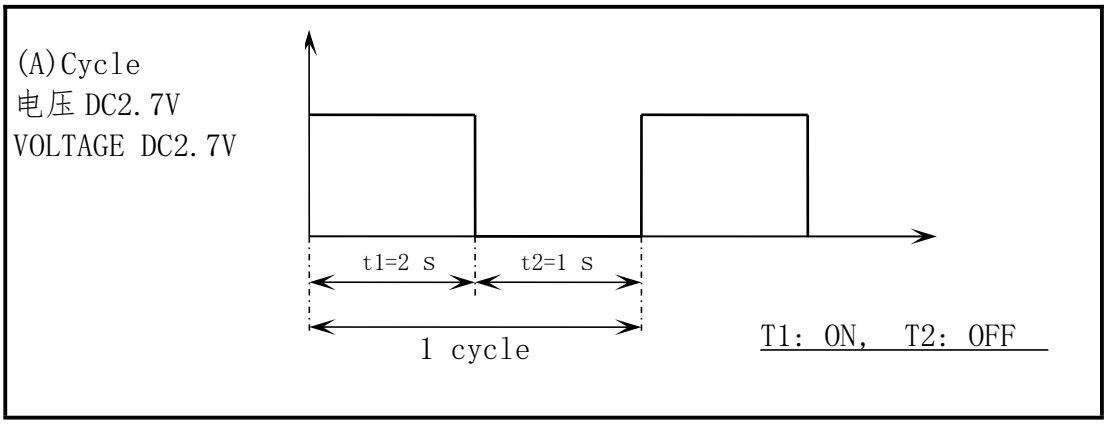

10.1-1-1 常温寿命试验/Room Temperature Life Test

1.按A周期运行96小时/To maintain (A)cycle for 96hrs in the process of temperature shock.

10.1-2-1 高温寿命试验/High temperature Exposure Life test

1.按A周期运行72小时/To maintain(A)cycle under high temperature for 72hrs.

10.1-3-1 低温寿命试验/Low temperature Exposure Life test

1.按A周期运行72小时/To maintain(A)cycle under high temperature for 72hrs.

► 判定标准/Judgment standard

ⓐ试验后，测试数据必须符合以下规格：

After test, measured data must be satisfied as following specifications;

- 启动电压：DC2.3V MAX.
- Starting voltage: DC2.3V MAX.

- 额定转速：变化率在初始值的+30%～-20%以内。
- Rated speed: changing rate must be within +30%～-20% of initial value.
- 额定电流：变化率在初始值的+20%～-30%以内。
- Rated current: changing rate must be within +20%～-30%of initial value.

11.环保要求/Environment Protections

本产品所有零部件符合欧盟RoHS2.0/无卤/REACH指令要求，具体环境有害物质管控限制如下：

This product conforms to the EU ROHS2.0, halogen-free and REACH certification,Specific content as follows:

铅及其化合物最大允许含量为1000ppm/Lead and Lead compounds≤1000ppm
镉及其化合物最大允许含量为1000ppm/Cadmium and cadmium compounds≤1000ppm
汞及其化合物最大允许含量为1000ppm/Mercury and Mercury compounds≤1000ppm
六价铬化物最大允许含量为1000ppm/Hexavalent chromium compounds≤1000ppm
多溴联苯(PBB)最大允许含量为1000ppm/Polybrominated biphenylethers≤1000ppm
多溴联苯醚(PBDE)最大允许含量为1000ppm/Polybrominated diphenylethers≤1000ppm
邻苯二甲酸二正丁酯(DBP)最大允许含量为1000ppm /DBP≤1000ppm
邻苯二甲酸正丁基苄酯(BBP)最大允许含量为1000ppm/BBP≤1000ppm
邻苯二甲酸(2-己基)己酯(DEHP)最大允许含量为1000ppm/DEHP≤1000ppm
六溴环十二烷(HBCDD)最大允许含量为1000ppm/HBCDD≤1000ppm
溴Br最大允许含量为900ppm/Br≤900ppm
氯Cl最大允许含量为900ppm/Cl≤900ppm
溴加氯之和最大允许含量为1500ppm/Br+Cl≤1500ppm
REACH指令按最新法规内容管控执行
包装材料环保管控要求：Pb, Cd, Hg, Cr+6 : 4种物质总和< 100ppm (其中, Cd<50ppm)。

12.注意事项/CAUTION FOR USE

(1)该马达是微型精密产品，在运输过程中不要承受超过0.5 kgf的力，否则会引起外形或性能的变化.

As this motor is small and precise, do not press it over 0.5kgf force or while transportation, otherwise it will cause the transformation of performance or external appearance.

(2) 请注意马达不要接触到液体性物质（比如：水，酒精等）

Please keep the motor away from liquid substance (such as water, alcohol, etc.)

(3) 不要在高温下长时间放置，否则有可能导致电机的性能下降。

Do not expose the motor to high temperature for a long time, it may cause a decline in performance.

(4) 马达不要在以下环境中使用：
- 高温和高湿的场所
- 腐蚀性气体如H_2S、SO_2、NO_2等

Avoid using the motor in the following environment.
- High temperature and high humidity area.
- Corrosive gas such as H_2S、SO_2、NO_2 etc.

(5) 请不要在靠近磁铁或带有磁场的仪器旁边使用或存放马达。
Please do not operate or store the motor adjacent to magnet or apparatus which has a magnetic field.

(6)请注意机壳的表面存在漏磁通量。
Please be careful that there exists a leaking magnetic flux on the surface of bracket.

(7)电刷和换向器的相互作用，有可能产生轻微的电噪音。
Due to interaction between brush and commutator, there is a possibility to occur electrical noise slightly.

(8) 如有任何问题，宝龙和客户双方应共同努力解决。
If any problems occur, both the user and Baolong side shall try to solve the problem together.

(9) 因测试设备有误差，允许有±5%偏差。
Due to the measurement equipment error, there is a ± 5 % difference tolerance.

(10) 接电端子扭曲、折弯次数不可多于 2 次。
Current terminals should not be twisted or bent more than twice.

(11) 被焊锡的端子局部受压不可多于2次。
The portion when lead wire and terminal are soldered should not be under stressed more than twice.

(12) 在马达通电时，不宜长时间锁住不转。

Do not subject the motor under locked condition for long hours.

(13) 不可向马达一侧强行挤压接电端子。

Do not exert pressure by pushing the current terminals towards the direction of the internal motor.

(14) 马达通过ROHS认证

This motor pass the system of ROHS certification.

(15)

出厂检验报告附上35只马达特性数据和CPK值,其中包括:
负载转速：rpm
负载电流：m A
堵转电流（启动电流）：m A
启动电压：不考虑CPK值

Out-going test data and Cpk data will be attached (n-35) for
Loaded rotation r.p.m.
Loaded current mA
Lock current (Starting current) mA
Starting voltage V (without the consideration of Cpk value) .

13.外形图/Outside view

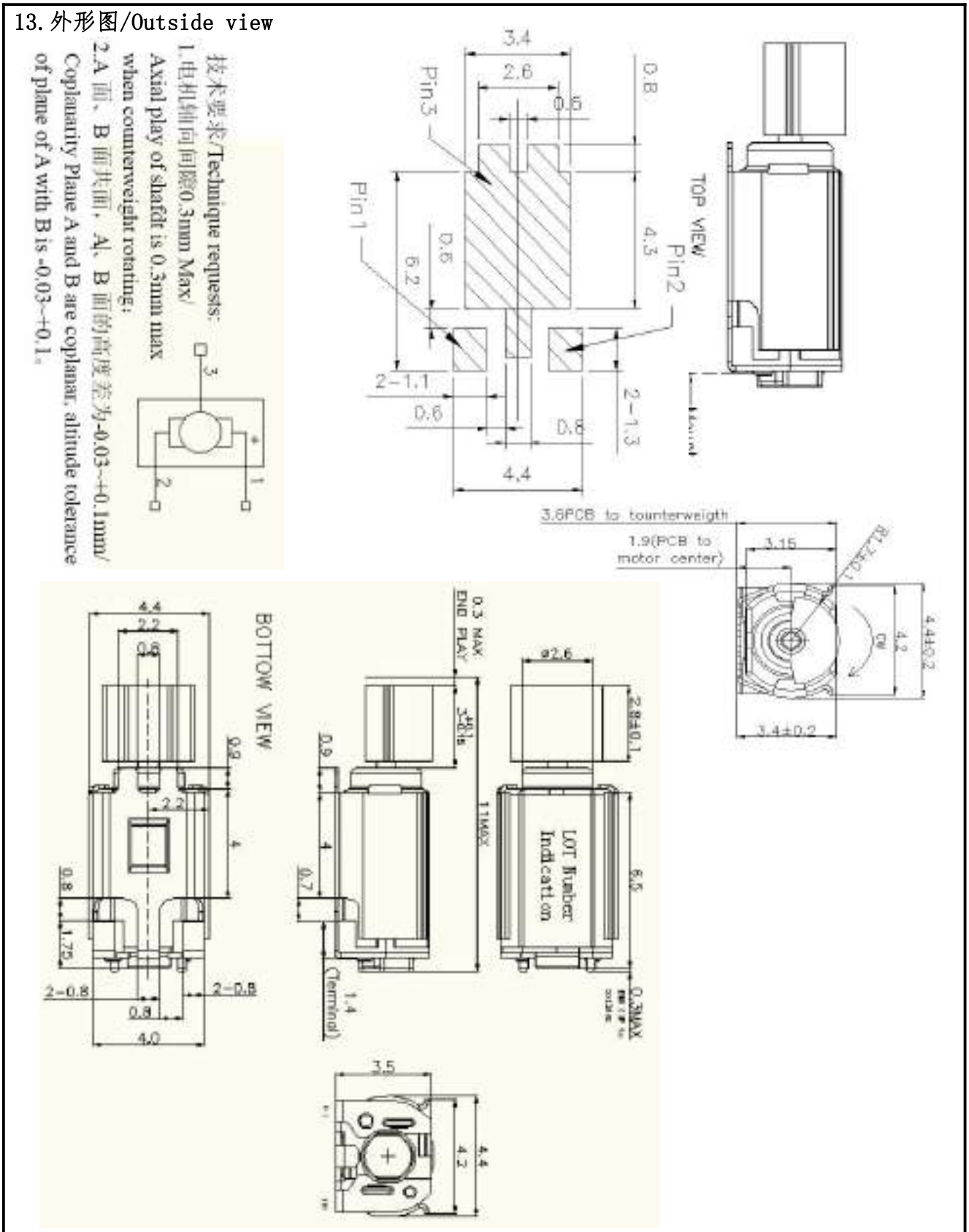

14.结构图及物料清单/Structure drawing & BOM

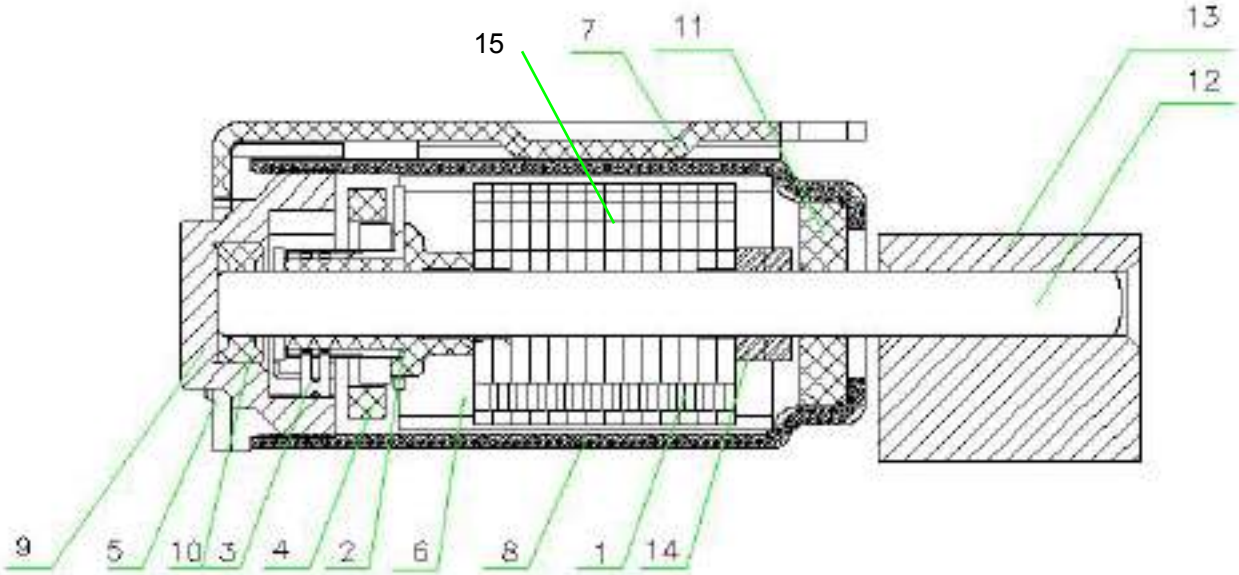

NO.	部件名称/Part name	材料名称/Material name
1	涂装铁芯/Iron core	20HTH1500
2	整流子/Commutator slice	SP-2/MX215/LCP
3	电刷/Brush	SP-1/MX96
4	变阻/Varistor	钛酸锶/SrTi03
5	焊锡端子/Terminal	黄磷铜/Yellow phosphorus copper
6	磁钢/Magnet	钕铁硼/NdFeB
7	支架/Bracket	SUS301
8	机壳/Case	SPCC
9	基板/Brush board	PA46
10	外壳轴承/Bearing	铜铁基/Cu
11	基板轴承/bearing	铜铁基/Cu
12	钢轴/Shaft	DSR7B
13	分铜/Counterweight	钨合金/Tungsten alloy
14	套管/Casing	PA46
15	漆包线/Enamel Covered wire	铜线/Cu

15.包装要求/Packaging requirement

15.1 最小包装/Smallest Packing

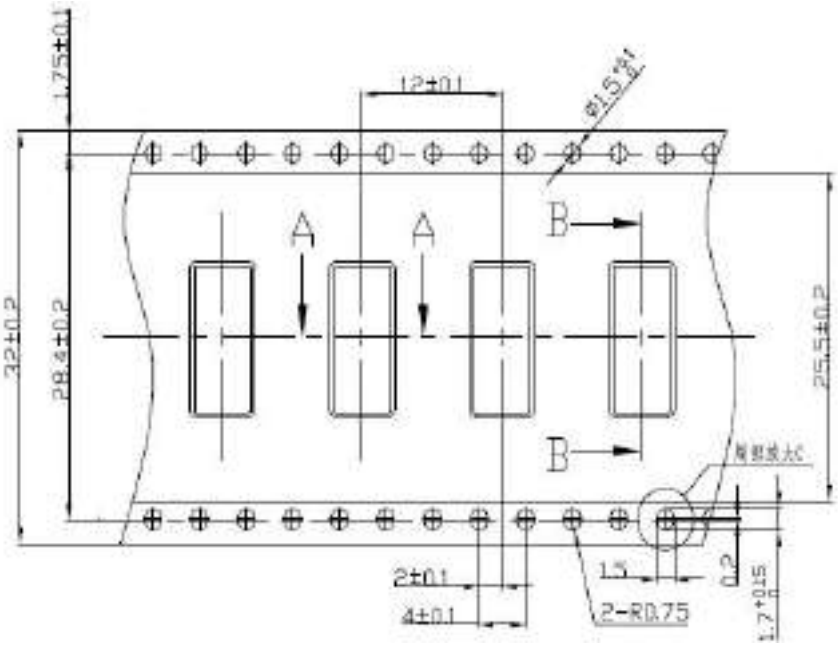

15.2 卷轴包装/1 reel packing dimension

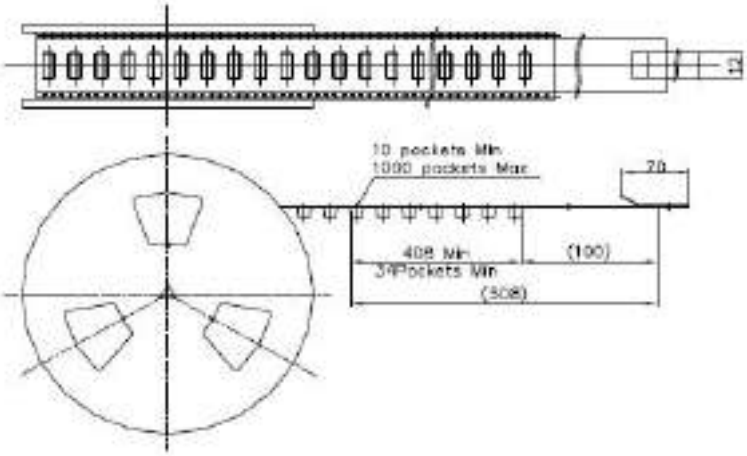

15.3 最终包装/Final Packing Condition

双层波纹纸/Double wall corrugated carboard (internal dimension)

1000pcs/1 reel x 5reel = 5000pcs

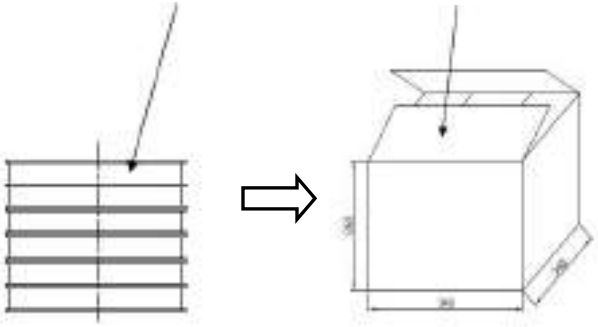

5 个内箱装入外箱，数量共 5000 只；
Put 5 inner-box into outer-box, total 5000 Pcs.
外箱尺寸：(长 340mm 宽:340mm 高:260mm)

16. 标识/Lot No. Indication

16.1 最小包装/Smallest Packing

Day	1	2	3	4	5	6	7	8	9	10	11	12	13	14	15	16
Prit	1	2	3	4	5	6	7	8	9	A	B	C	D	E	F	G
Day	17	18	19	20	21	22	23	24	25	26	27	28	29	30	31	
Print	H	I	J	K	L	M	N	O	P	Q	R	S	T	U	V	

17. 生产过程中回流老化后检查/The inspection after reflow is implemented in product process.

Reflow specification

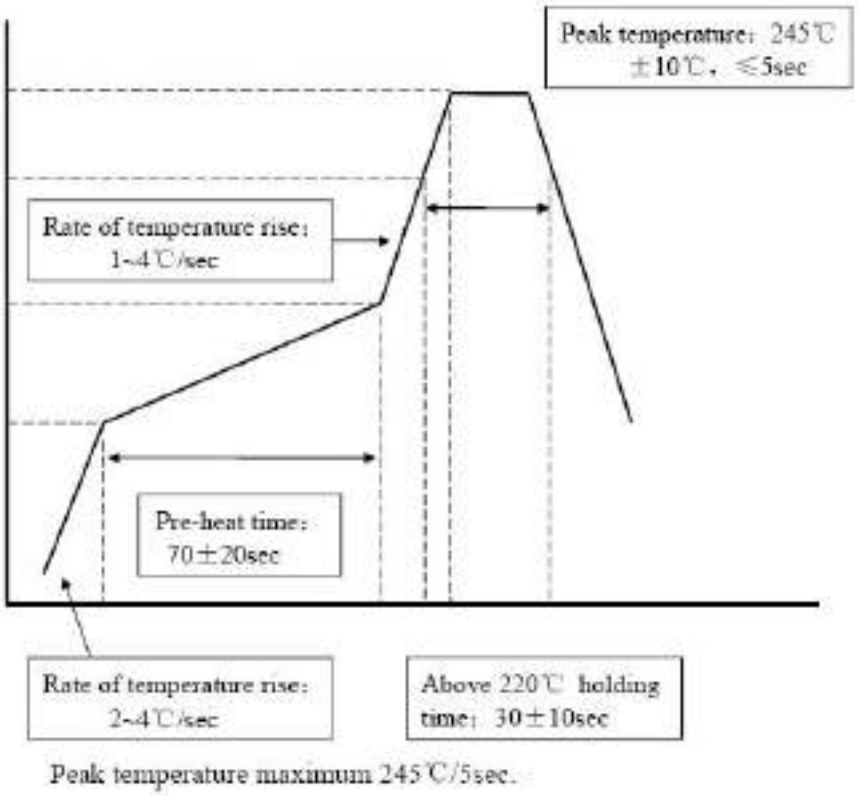

Peak temperature maximum 245℃/5sec.